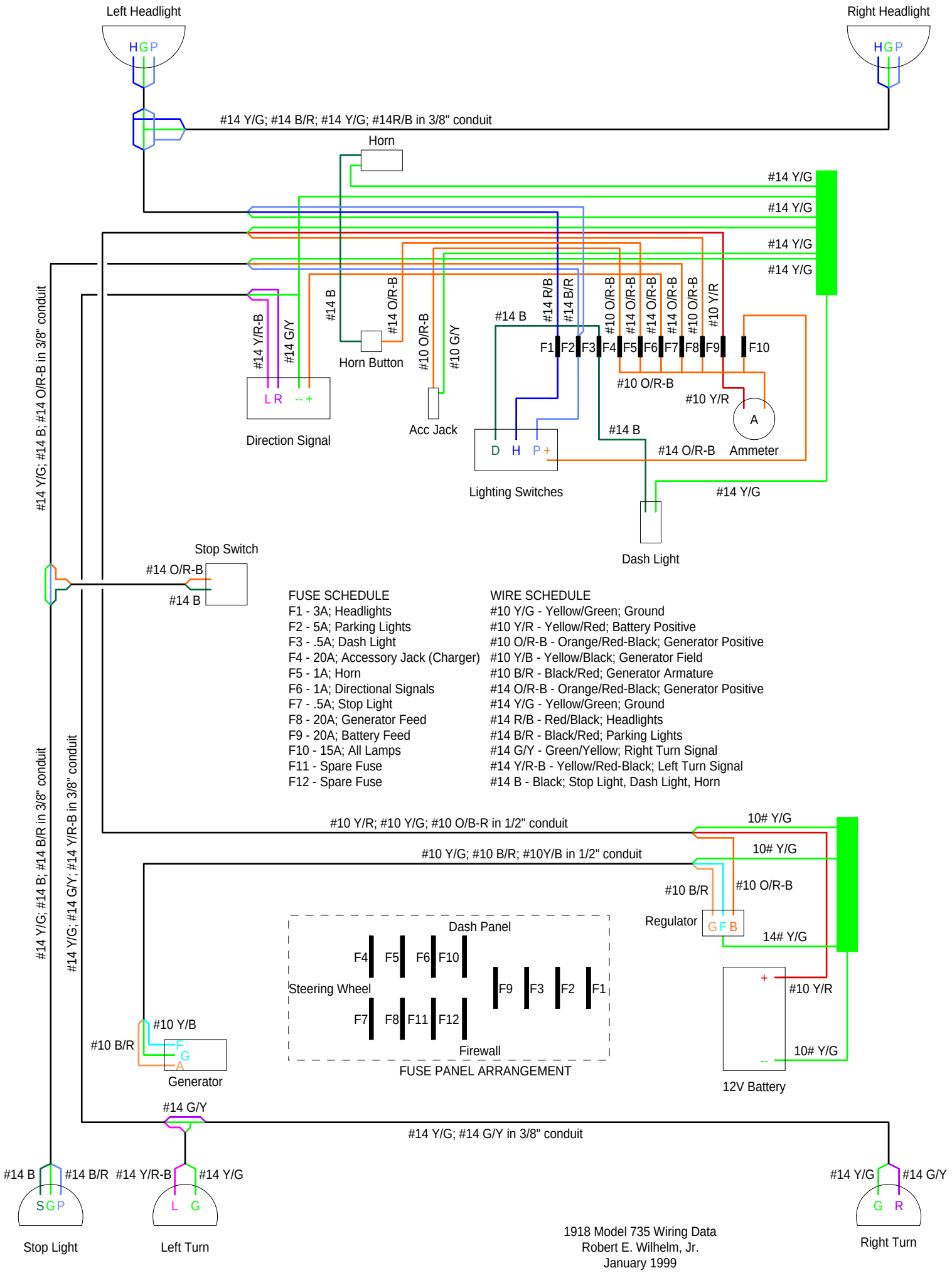

1918 Model 735 Wiring Data
Robert E. Wilhelm, Jr.
January 1999